A)

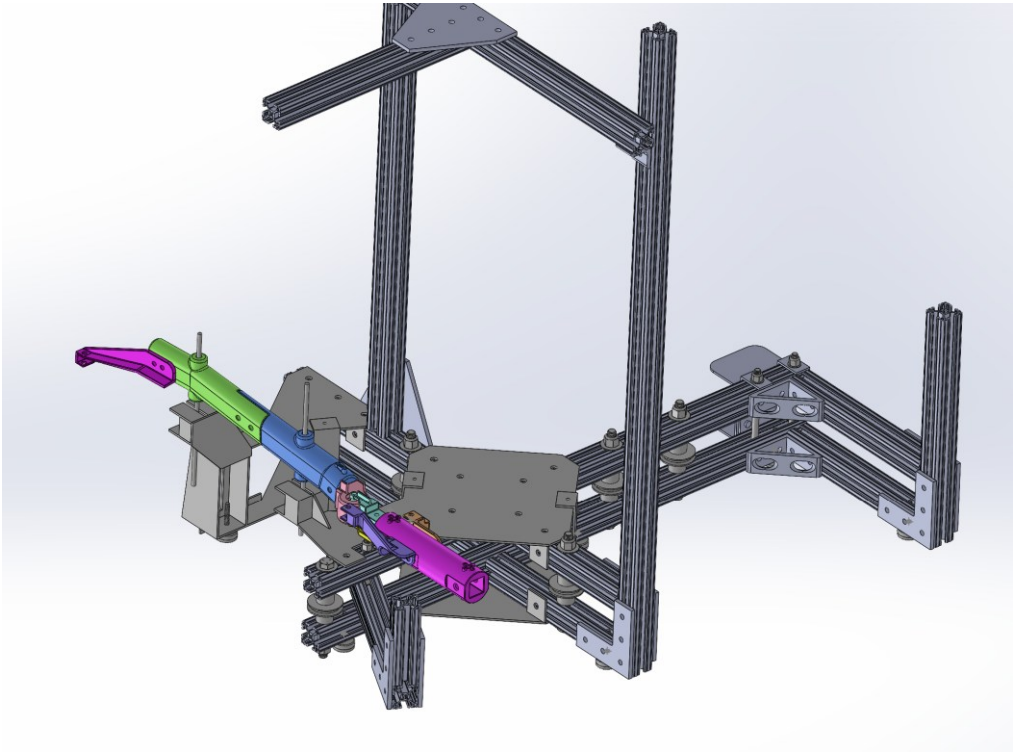

B)

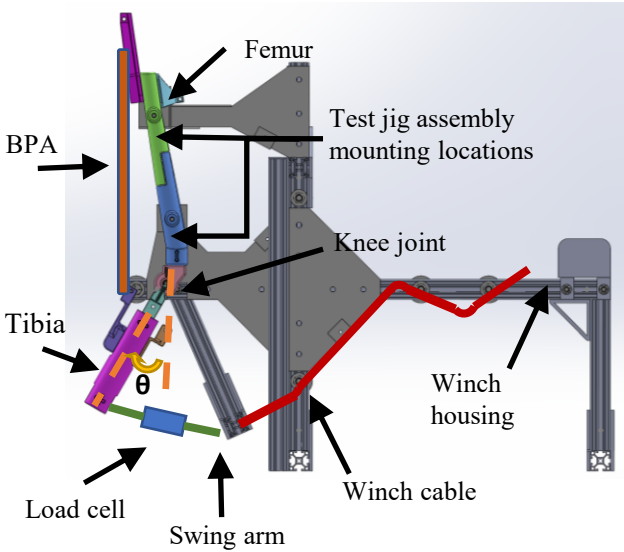
Femur
Test jig assembly
mounting locations
BPA
Knee joint
Tibia
θ
Winch
housing
Load cell
Swing arm
Winch cable
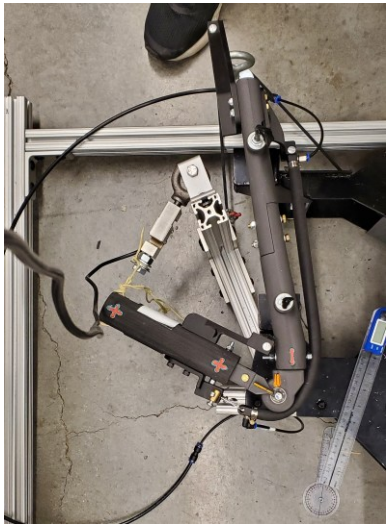
C)